Instruction manual

Valve pneumatic actuators GT

Contents

Pneumatic ball valve

Structure diagram

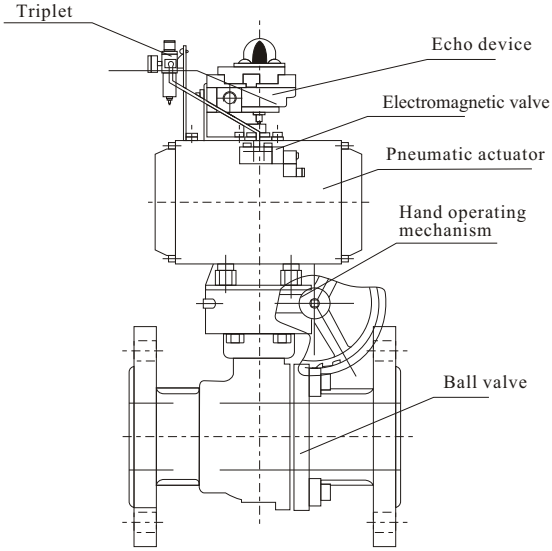

Main performance specifications

Nominal diameter DN(mm)		15-250		
Nominal pressure PN(MPa)		1.0 1.6 2.5 4.0 6.4 10 15		
Test Pressure Ps(MPa)	StrenGTh test	1.5 2.4 3.75 6.0 9.6 15 22.5		
	Seal test	1.1 1.76 2.75 4.4 7.04 11 16.5		
Material	Material code	C	P	R
Main components	Valve body	WCB	ZG1Cr18Ni9Ti	ZG1Cr18Ni12MoTi
	Ball	WCB	1Cr18Ni9Ti	1Cr18Ni12MoTi
	Valve stem	2Cr13	1Cr18Ni9Ti	1Cr18Ni12MoTi
	Seal ring	Increase Polytetrafluoroethene or pare-polyphenyl		
	Stuffing	Polytetrafluoroethylene or applicable medium of flexible graphite		
Applicable working conditions	Applicable medium	Water, steam, and oil products	Nitric acid	Acetic acid
	Applicable temperature	-28℃~300℃		
Actuator	Type	GT		
	Air source pressure	0.4~0.7MPa		

Pneumatic butterfly valve

Structure diagram

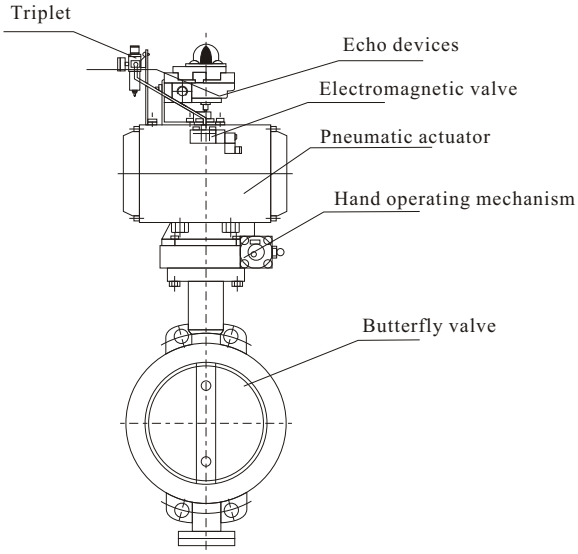

Main performance specifications

Nominal diameter DN(mm)		50-600		
Nominal pressure PN(MPa)		0.6 1.0 1.6 2.5 4.0 6.4 10		
Test Pressure Ps(MPa)	StrenGTh test	0.9 1.5 2.4 3.75 6.0 9.6 15		
	Seal test	0.7 1.1 1.76 2.75 4.4 7.04 11		
Material	Material code	C	P	R
Main components	Valve body	WCB	ZG1Cr18Ni9Ti	ZG1Cr18Ni12MoTi
	Ball	WCB	1Cr18Ni9Ti	1Cr18Ni12MoTi
	Valve stem	2Cr13	1Cr18Ni9Ti	1Cr18Ni12MoTi
	Seal ring	Nitrile Ethylene-propylene Fluorine plastics		
	Stuffing	Nitrile Flexible graphite V-shaped rubber mats		
Applicable working conditions	Applicable medium	Water, steam, and oil products	Nitric acid	Acetic acid
	Applicable temperature	Rubber ⩽130℃ Tetrafluoro ⩽150℃		
Actuator	Type	GT		
	Air source pressure	0.4~0.7MPa		

Pneumatic actuator of GT valve

I. Functions

Pneumatic actuator of GT valve is driven by compressed air and it is the drive device for starting and closing angle stroke valves such as ball valve and butterfly valve. Besides, it is the ideal device for realizing long-distance concentration of pipelines or separately controlling automatic industrial pipeline.

Electromagnetic valve, positioner (opening position indicator), echo device, filter, pressure reducing valve, various limit switches and hand operating devices.

II. Main technical parameters

1.Medium used: clean, dry and non-corrosive compressed air
2.Working pressure of air source : 0.4~0.7MPa
3.Temperature of working environment: standard: -20℃~+80℃
High temperature type: -20℃~+180℃ (the temperature can reach 200℃ in short time)
4.Rotary angle: 90° ±5°
5.Electromagnetic valve power supply: AC220V/DC24V, or according to customers' needs
6. Output torque: see GTD double acting actuator in Table 1
see GTE spring return actuator in Table 2.

Table 1

Item / specification	Output torque（N.m）			
	0.4MPa	0.5MPa	0.6MPa	0.7MPa
GTD52	16.64	20.8	24.96	29.1
GTD63	24.4	30.5	36.3	42.8
GTD83	59.2	74	88.8	103.6
GTD110	149	186.2	223.5	260.5
GTD127	238	297.9	357	416.5
GTD160	472	591	709	827
GTD190	889	1111	1334	1556
GTD210	977	1222	1466	1710
GTD255	2162	2702	3243	3783
GTD300	3326	4156	4987	5818
GTD350	5280	6600	7620	9240

Table 2

Type		Spring torque	Output torque (N.m)			
			0.4MPa	0.5MPa	0.6MPa	0.7MPa
GTE52×90°	K2	4.0	8.9	12.8	16.7	20.7
	K3	6.0	5.6	9.5	13.4	17.3
	K4	8.0	2.3	6.2	10.1	14.0
	K5	10.0		2.9	6.8	10.7
	K6	12.0			3.5	7.4
GTE63×90°	K2	6.4	14.0	19.8	25.6	31.4
	K3	9.6	9.4	15.2	21.0	26.8
	K4	12.8	4.80	10.6	16.4	22.2
	K5	16.0		6.0	11.8	17.6
	K6	19.2		1.4	7.2	13.0
GTE83×90°	K2	12.8	34.8	48.8	62.8	76.8
	K3	19.2	24.2	38.2	52.2	66.2
	K4	25.6	13.6	27.6	41.6	55.6
	K5	32.0	3.0	17.0	31.0	45.0
	K6	38.4		6.4	20.4	34.4
GTE110×90°	K2	30.5	65.3	93.5	121.7	149.9
	K3	45.7	41.6	69.8	98.0	126.2
	K4	60.9	17.9	46.1	74.3	102.5
	K5	76.2		22.3	50.5	78.7
	K6	91.4			26.8	55.0
GTE127×90°	K2	50.0	136.0	191.0	246.0	301.0
	K3	75.0	94.0	149.0	204.0	259.0
	K4	100.0	52.0	107.0	162.0	217.0
	K5	125.0	100.0	65.0	120.0	175.0
	K6	15.0		23.0	78.0	133.0
GTE160×90°	K2	104.0	284.5	394.5	504.5	614.5
	K3	156.0	206.7	316.7	426.7	536.7
	K4	208.0	129.0	238.0	349.0	459.0
	K5	260.0	51.2	161.2	271.2	381.2
	K6	312.0		83.5	193.5	303.5

表2
Table 2

Type		Spring torque	Output torque (N.m)			
			0.4MPa	0.5MPa	0.6MPa	0.7MPa
GTE190×90°	K2	206.5	506.2	703.6	901.0	1098.0
	K3	309.7	364.5	561.9	759.3	956.7
	K4	412.9	222.8	420.2	617.6	815.0
	K5	516.2	81.2	278.5	475.9	673.3
	K6	619.4		136.9	334.3	531.6
GTE210×90°	K2	212.8	640.4	877.4	1114.4	1351.4
	K3	319.2	486.6	723.6	960.6	1197.6
	K4	425.6	332.8	569.8	806.8	1043.8
	K5	532.0	179.0	416.0	653.0	890.0
	K6	638.4	25.2	262.2	499.2	736.2
GTE255×90°	K2	472.0	1297.8	1841.8	2385.8	2929.8
	K3	708.0	858.7	1402.7	1946.7	2490.7
	K4	944.0	419.6	963.6	1507.6	2051.6
	K5	1180.0		524.5	1068.5	1612.5
	K6	1416.0		85.4	629.4	1173.4
GTE300×90°	K3	876	1944	1832	3312	4000
	K4	1168	1704	1744	3064	3752
	K5	1460		2136	2824	3504
	K6	1750			2576	3256
GTE350×90°	K3	1164	2568	3472	4328	5288
	K4	1552	2232	3056	4048	4152
	K5	1940		2800	3712	4568
	K6	2320			3376	4288

III. Transmission structure principles

When the compressed air enters the pneumatic actuator through Nozzle A (as shown in Fig 1), the air will drive the double piston straightly moving toward two ends (cylinder head end) and the piston rack will drive the gear of the rotary shaft by 90 degrees counter-clockwise. In this case, the valve will be opened. At this moment, the air in both ends of pneumatic actuator is discharged through Nozzle B. On the contrary, when the compressed air entered both ends of the pneumatic actuator through Nozzle B (as shown in Fig 1), the air will drive the double piston to straightly move towards the middle position and the piston rack will drive the gear of the rotary shaft by 90 degrees clockwise. In this case, the valve is closed. At this moment, the air in the middle of the pneumatic actuator is discharged through Nozzle A. What is aforementioned is the transmission principle. According to users' needs, the pneumatic actuatorcan be equipped with transmission principles contrary to the standard type. In other words, the valve will be opened when the rotary shaft rotates clockwise, while the valve is closed when it rotates counterclockwise.

Single acting (spring return type) pneumatic actuation is implemented along the Nozzle A which is the air inlet, while Nozzle B is the air outlet (a muffler shall be installed in the Nozzle B). When Nozzle A inlets air, the valve will be opened, while the valve will be closed by the spring force when the air source is cut off.

Fig 1

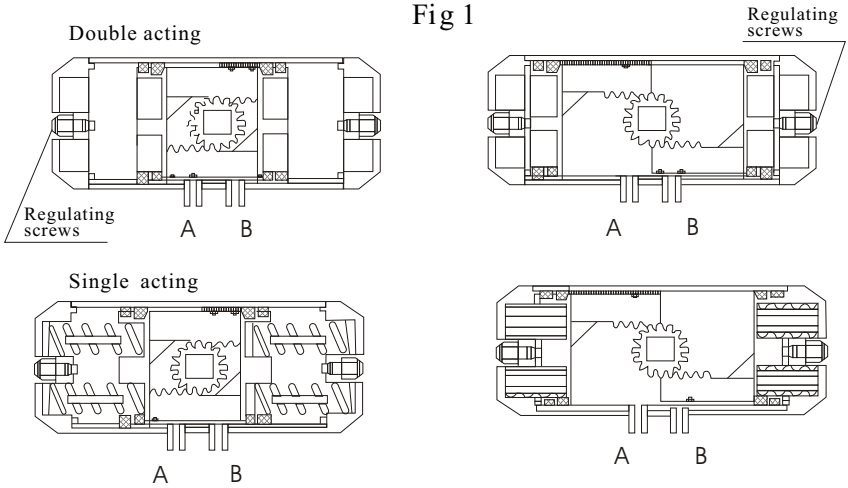

IV. Actuator weight/volume/opening or closing time

Double acting type	Volume L	Weight KG	Single acting type	Volume L	Weight KG	Opening or closing time S
GTD40	0.13	0.69	GTE40	0.065	1.2	≤0.5
GTD52	0.23	0.9	GTE52	0.12	1.6	≤0.5
GTD63	0.44	1.5	GTE63	0.22	2.3	≤0.5
GTD83	0.88	2.6	GTE83	0.41	4.1	≤1.5
GTD110	1.98	6.1	GTE110	0.92	9.3	≤2
GTD127	3.13	9.2	GTE127	1.5	13.9	≤2.5
GTD160	6.2	16.7	GTE160	3.0	24.8	≤4
GTD190	11.8	27.1	GTE190	5.7	40.8	≤5
GTD210	16.5	32.2	GTE210	8.1	46.9	≤7
GTD255	31.3	69.3	GTE255	15.4	102.6	≤10
GTD300	43.9	98.9	GTE300	21.5	145.3	≤10
GTD350	65.4	148.1	GTE350	31.9	216.6	≤10

V. List of parts

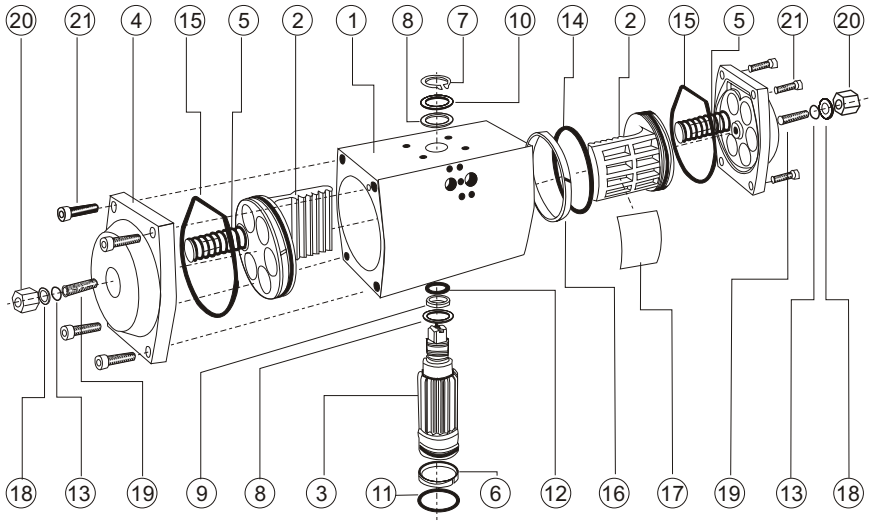

Serial No.	Name	Quantity
1	Shell	1
2	Piston	2
3	Rotary shaft	1
4	End cap	2
5	Spring/spring retainer	8-12
6	Lower bearing	1
7	Flexible retaining ring	1
8	Shaft washer	2
9	Upper bearing	1
10	Horizontal shaft washer	1
11	Lower shaft O- ring	1

Serial No.	Name	Quantity
12	Upper shaft O- ring	1
13	Seal O-ring	1
14	Piston O-ring	1
15	Seal ring for end cap	2
16	Piston guide ring	2
17	Piston crankshaft	2
18	Horizontal washer for end cap	2
19	Regulation bolt	2
20	Hexagonal nut	2
21	Inside hexagonal bolt	8
22		

VI. shape and Table of connection dimensions

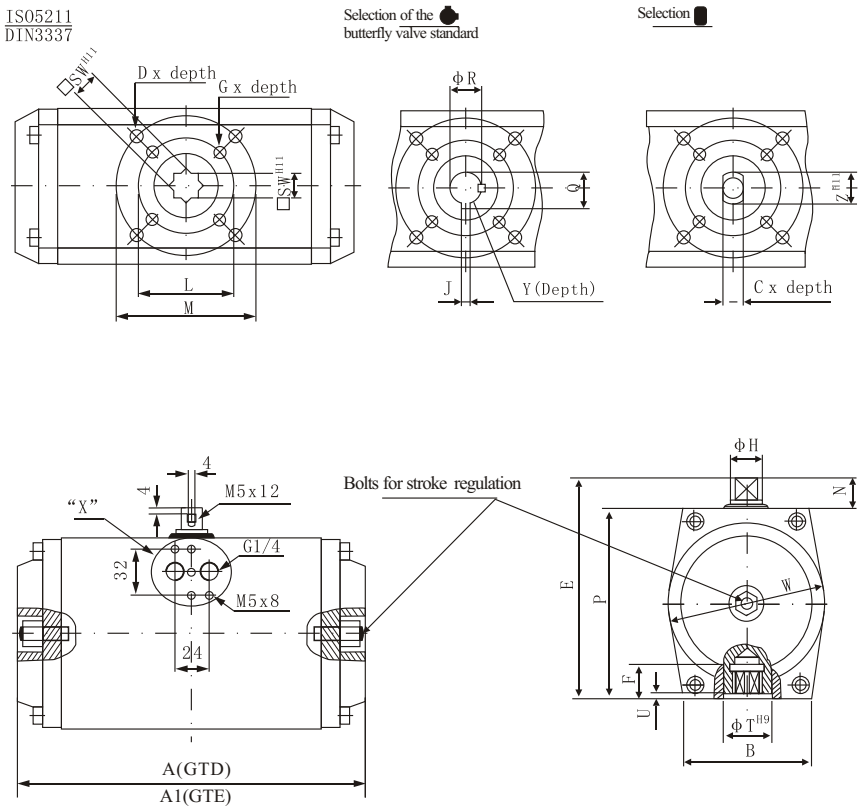

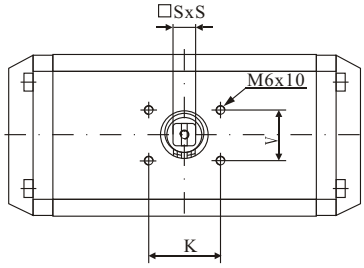

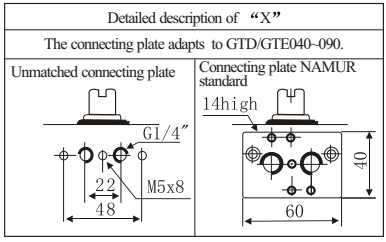

Type	A	A1	B	C × depth	D × depth	E	F	G × depth	H	J	K	L
GTD/GTE52	130	-	50	8 × 12	M6 × 10	94	15	M5 × 8	12	3	80	F03. Φ36
GTD/GTE63	140	-	60	10 × 15	M8 × 12	108	15	M6 × 10	12	3	80	F05. Φ50
GTD/GTE83	186	-	65	10 × 16	M8 × 12	128	17	M6 × 10	18	5	80	F05. Φ50
GTD/GTE110	254	-	90	14 × 22	M10 × 16	160	25	M8 × 12	25	5	80	F07. Φ70
GTD/GTE127	296	-	103	20 × 24	M10 × 16	180	25	M8 × 12	30	5	80	F07. Φ70
GTD/GTE160	384	-	128	28 × 30	M12 × 20	228	30	M10 × 16	45	8	130	F10. Φ102
GTD/GTE190	501	-	118	28 × 30	M16 × 24	257	34	M10 × 16	50	8	130	F10. Φ102
GTD/GTE210	533	-	135	32 × 34	M16 × 24	285	34	-	55	8	130	-
GTD/GTE255	589	722	159	40 × 40	M20 × 24	332	52	M20 × 24	65	10	130	F16. Φ165
GTD/GTE300	638	793	196	40 × 40	M20 × 28	380	52	-	75	12	150	-
GTD/GTE350	721	931	220	50 × 50	M20 × 28	438	72	-	90	12	150	-

Type	M	N	P	Q	R	□S × S	□SW	ΦT	U	V	W	Y depth	Z
GTD/GTE52	F05.Φ50	20	74	14.2	Φ12.7	10 × 10	11 × 11	24	1	30	59	32	12
GTD/GTE63	F07.Φ70	20	88	14.2	Φ12.7	10 × 10	14 × 14 11 × 11	24	1	30	70	32	16
GTD/GTE83	F07.Φ70	20	108	18.4	Φ15.9	13 × 13	14 × 14 17 × 17	32	1	30	91	32	16
GTD/GTE110	F10.Φ102	20	140	21.6	Φ19.1	16 × 16	17 × 17 22 × 22	47	1	30	120	45	22
GTD/GTE127	F10.Φ102	20	160	24.8	Φ22.3	19 × 19	22 × 22	53	1	30	137	45	30
GTD/GTE160	F12.Φ125	30	198	32.1	Φ28.6	28 × 28	27 × 27	66	2	30	173	45	42
GTD/GTE190	F12.Φ125	30	227	32.1	Φ28.6	28 × 28	36 × 36	89	2	30	208	45	42
GTD/GTE210	F14.Φ120	30	255	35.3	Φ31.8	28 × 28	36 × 36	89	2	30	224	45	48
GTD/GTE255	200×120	30	302	37.4	Φ33.4	28 × 28	46 × 46	119	2	30	274	50	60
GTD/GTE300	200×140	30	350	45.3	Φ41.3	28 × 28	46 × 46	135	2	30	322	65	80
GTD/GTE350	260×160	30	408	50.8	Φ50.8	28 × 28	60 × 60	156	2	30	378	70	100

VII Selection of GT type

1.Selection of double acting actuator:

Select double acting actuator and look up the torque gage of the double acting torque. Increase 10% safe value according to required torque value. Then look up the torque gage in accordance with the working pressure of the air source to get a proper GT type.

Let's take a valve requiring 200Nm torque, another 10% is added for consideration of safety factors and the torque reaches 220Nm. Then GT127×90° type actuator can be chosen (275Nm torque shall be provided when the pressure is 0.5MPa), or GT118×90° type actuator can be selected (252Nm torque can be provided when the pressure is 0.6 MPa) .

2.Selection of spring return actuator

As regards the selection of the spring return actuator, 20% safe value shall be added according to the required torque value. Then look up a torque value just a little larger than the safe value within the spring torque column in the Spring Return Torque Table. In this case, proper type of the single acting actuator (the value shall be a little larger than the spring torque) can be found in accordance with the working pressure of air source. For instance, to control a valve requiring 80Nm torque, another 20% shall be added and the torque value reaches 96Nm to ensure safety. Look up the 107Nm torque value in the line of GT127×90° K4 inside the column marked with spring torque. Look up the 107Nm torque value inside the column marked with 0.5MPa along this line. The required actuator type is GT127×90° K4 and the required working pressure of air source is 0.5MPa.

VIII. Features

1. With regard to the compact double piston gear-rack type structure, its gear connection is precise with high efficiency and the output torque is constant.
2. Compared with the actuator with the same specification and structure, the weight of aluminum cylinder block, piston and end cap is the lightest.
3. The cylinder block is made from extruded aluminum alloy and it is processed by hard anodic oxidation. The inner surface is very hard with high strenGTh. Sliding bearing made from low friction materials is applied to avoid direct contact of metals with each other. The friction coefficient is low and the cylinder block can be flexibly rotated with long service life.
4. Pneumatic actuator and valve connection meet the ISO5211 standard.
5. The air source hole meets the NAMUR standard.
6. The bottom shaft hole of pneumatic actuator (meeting the ISO5211 standard) is a square pair, to be convenient for the linear installation or 45 degree angle installation of square bar valves.
7. The top and top hole of the output shaft meet the NAMUR standard.
8. Regulating screws in both ends can adjust the opening angle of valves.
9. Double and single acting (spring return) have the same specifications.
10. The direction (clockwise or counterclockwise rotation) can be decided according to the needs of valves.
11. Install electromagnetic valve, positioner (opening indicator), echo device, various limit switches and hand operating devices according to users' needs.

IX. Installation, debugging, operation and maintenance

1. GT pneumatic actuator and valve connection meet the ISO5211 standard, while they can be directly connected with valves. Furthermore, they can be connected with all valves through transition support and connection.
2. It shall be ensured that the rotary shaft of pneumatic actuator and valve shaft are coaxial during installation.
3. The nozzle and pipe shall be cleaned without any redundant things, dust and oil dust, etc inside.
4. Copper tube or nylon tube can be applied for the connection of pneumatic actuator, electromagnetic valve, positioner and pressure reducing valve, etc. To prevent dust and reduce noise, the muffler or muffler throttle valve shall be installed at the air outlet.
5. Regulating screws in both ends of pneumatic actuator can slightly adjust the opening angle of valves. After regulation, the nut shall be screwed up.
6. After installation, the pneumatic actuator and valve shall be simultaneously tested, while the pressure of the valve shall be increased to the rated pressure. The pneumatic actuator switches air inflow of its two air inlets by air source pressure ranging from 0.4 to 0.7MPa, observing the opening and closing conditions of the valve. It shall be flexibly rotated with no jamming phenomena, while tests shall be repetitively carried out.
7. As regards the installation of the pneumatic actuator of the electromagnetic valve, the hand operating device shall be applied first for debugging (pressing the red button of the electromagnetic valve). Then the power shall be switched on for the debugging.
8. The pneumatic actuator shall be regularly maintained, while the water of the air filter used with the pneumatic actuator shall be regularly discharged and drained. Under normal conditions, it shall be tested once every six months and overhauled once per year.

Limit switch (accessory)

I. Product features

- Die-casting aluminum alloy shell is processed by powder coating. It is aesthetic in appearance and reliable in quality.
- The switch position can clearly be identified by indicator.
- Quickset cam is installed by spline shaft and spring, while it is very convenient to be adjusted without use of any tools.
- Terminal block with multiple points has 8 standard contact points. The wiring is safe and convenient.
- Standard wiring interfaces
- Anti-drop bolts won't fall off when they are attached to the upper cap during disassembly or installation.
- It can be conveniently installed. The stainless steel main shaft connection and installation bracket meet the NAMUR standard.

II. Technical parameters

Type	BAPL-3N		BAPL-4N	
	Standard	Option	Standard	Option
Level of protection	IP67		IP67 Ex dⅡ BT6 (EN50014/50018)	
Temperature	-25~85℃			
Wiring port	2×1/2 NPT	PT1/2 PF1/2 M20,PG13.5	2×3/4 NPT	PT3/4 PF3/4
Wiring terminal	8	9~24	8	9~24
	Meeting standards			
	0~90°	0~180°	0~90°	0~180°
Position indicator	Open-yellow; Closed-red			
Micro switch	Mechanical, inductive, spring proximity			
Potentiometer	1K ohm(0~5k ohm, 0~10k ohm)			
Current feedback	4~20mA(20~4mA)			

type	BAPL 210		BAPL 510
	standard	option	
level of protection	IP67 NEMA4 4X	IP68	IP65 NEMA4 4X
shell	die casting aluminum		V0 polyphenylene
environment	-20~80℃		-15~80℃
wiring port	2×NPT1 $^1/_2$	PF $^1/_2$ ″ PT $^1/_2$ ″ M20 PG13.5	PGB.S $^1/_2$ ″ NPT
wiring terminal	8POINTS(0.08-2.5mm^2)		standard PCB 6 wiring terminals 4 wiring terminals
position indicator	closed: red open: yellow	closed: red open: green	
switch	mechanical switch proximity switch		mechanical SPDT silver plated contact point mechanical SPDT gold plated contact point proximity Namur switch proximity PNP No switch

III.dimension diagram

BAPL3N

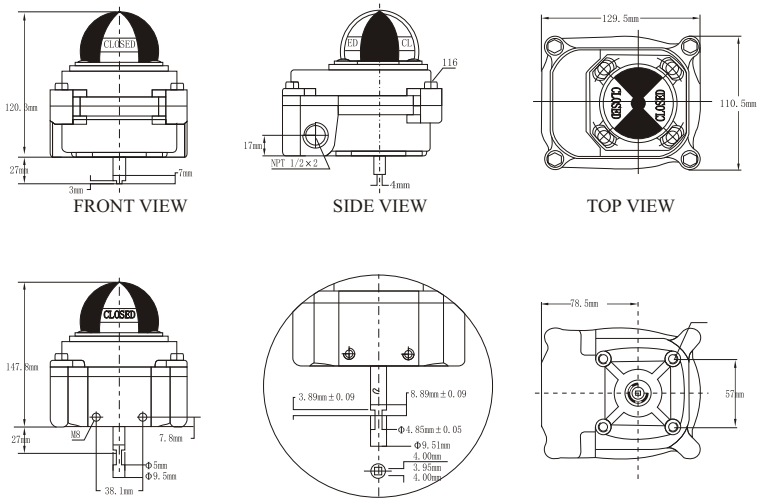

BAPL4N

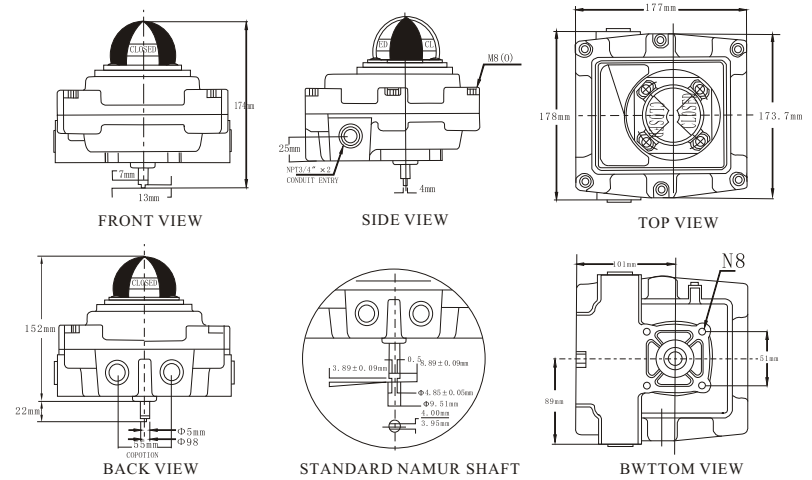

BAPL-210N

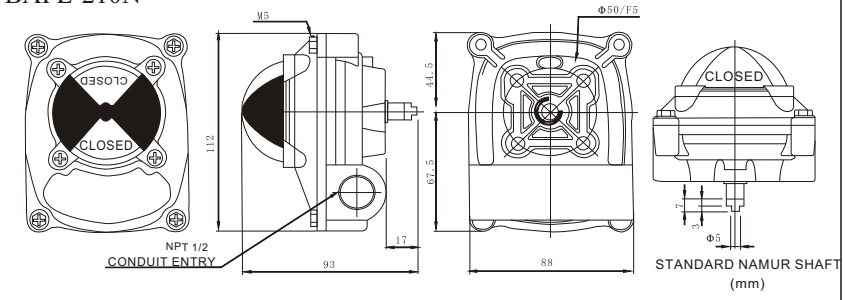

BAPL-510N

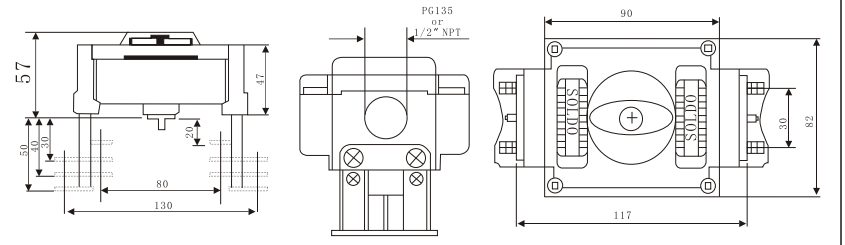

IV. the electrical wiring

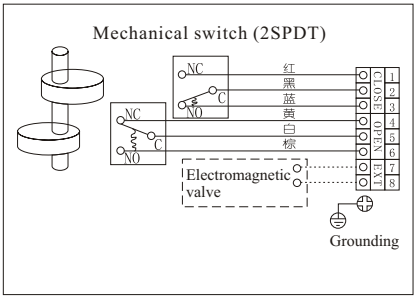

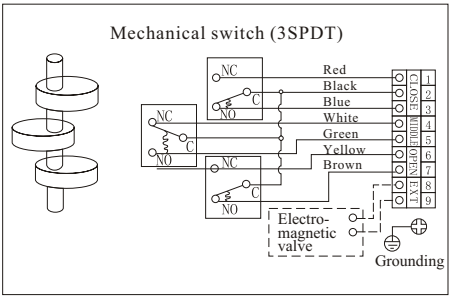

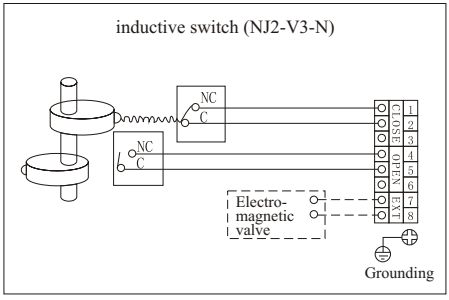

V. Type selection

BAPL - 3 10 N A

Shell

3 Weather protected type (IP67)

4 Explosion-proof type (Eexd Ⅱ BT6)

Micro switch

The shell of the indicator is fixed by screw bolts

Bracket
A、B
C、D

Mechanical	Inductive	Spring proximity type
10 2-SPDT	20 P&F.NJ2-V3-N	30 General type
11 3-SPDT	21 Autonics.PS17-50DNU	31 Wenzhou type (0~100℃)
12 4-SPDT	22 P&F.NJ412GM-N	
13 2-SPST	23 NBB2-V3	
14 2-DPDT		
15 2-SPDT+Potentiometer		
16 2-SPDT+Current feedback (4-20mA)		

VI. Micro switch

Mechanical switch Single-pole, double-throw			
DC	AC	Standards met	
0.6A.125VDC	16A.250VAC	UL(E177511) CSA(LR68515-6)	SWMC0(97111051-03) VDE(9242.3-4401-1001)

mechanical switch 2SPDT, single-pole, double-flow			
DC	AC	Temperature	Meeting standards
0.5A.250VDC	20A.125/250VAC	-40℃~85℃	UL1054

Inductive switch (safety type)		
Type	Voltage	Operating distance
P & FNJ2-V3-N	0~25VDC	2mm
PS17-5DNU	10~30VDC	5mm

VII. Bracket A、B、C、D

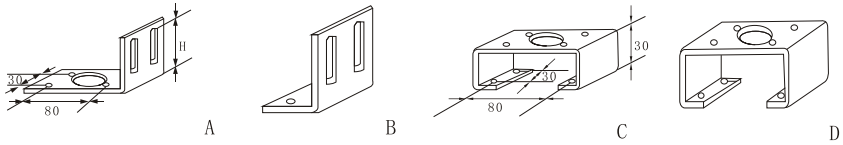

30×80 H：20~30 30×130 H：30~50 30×80 H：30 30×130 H：30

Used for ordinary limit switch
(installed on both sides)

Used for explosion-proof limit switch
(installed at the bottom)

Electromagnet valve (accessory)

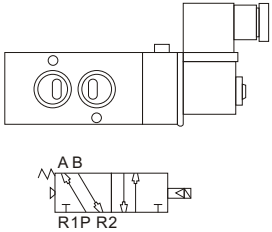

Single electricity control

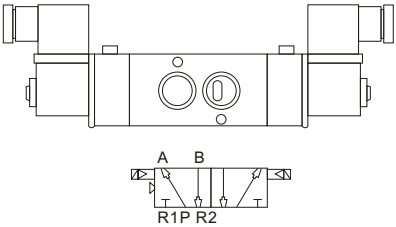

Double electricity control

I. Type description

3V – 1 10 – 06 – AC110V

Code：
100
200
300
400

Diameter of nozzle
M5： M5×0.8
06： 1/8″
08:1/4″
10:1/8″
15:1/2″

Type
3V： wo-position three-way
5V： two-position five-way

Type
10： single-coil double-position
20： double-coil double-position
30C： double-coil three-position closed type
30E： double-coil three-position open type
30P： double-coil three-position pressure type

Standard voltage
DC12V
DC24V
AC24V 50/60HZ
AC110V 50/60HZ
AC220V 50/60HZ

II. Technical parameters

说明: illustration

Specifications		Illustration
Fluid used		Air (filtered by 40 μ m filter net)
Mode of action		Internal guide type
Lubrication		Unnecessary
Pressure used		0.15~0.8MPa(1.5~8.0Bar)(21~114psi)
Operating pressure ℃		-5~60
On pressure Range	100	± 10%
	1/3/4	-15%~+10%
Electric power consumpti	100	DC: 2.5W AC: 3.0VA
	1/3/4	DC24:3.0W AC220V:2.0VA AC110V:2.5VA
Insulation		B Class
Service life		About 10 million times under normal conditions
Max function frequency	3V1/2/300	5
	4V100	4V110、4V120 specifications ： 5 4V130 specifications ； 3
	4V200	4V110、4V220 specifications ： 5 4V230 specifications ； 3
	4V300	4V310、4V320 specifications ： 4 4V330 specifications ； 3
	4V400	3
Excitation time （sec）		≤0.05

III. Operation and maintenance precautions

1. Please check whether the components are damaged or not during transportation before installation for use.
2. During installation, please check whether the air flow direction and connection tube are right or not.
3. During installation, please specially note whether the voltage meets the requirement or not. When the whole machine is debugged, you are recommended to apply the hand operating device first for debugging and then switch on the equipment for debugging.
4. Please pay attention to road dust and it is recommended that the muffler device or muffler throttle valve shall be installed at the air outlet.
5. During the connection of pipelines, please note that the thread seal tape shall not be intertwined over the tooth end face. Meanwhile, please remove the metal particles, dust and oil stain, etc of the pipe fitting and inside the pipe.

Air source triplet (accessory)

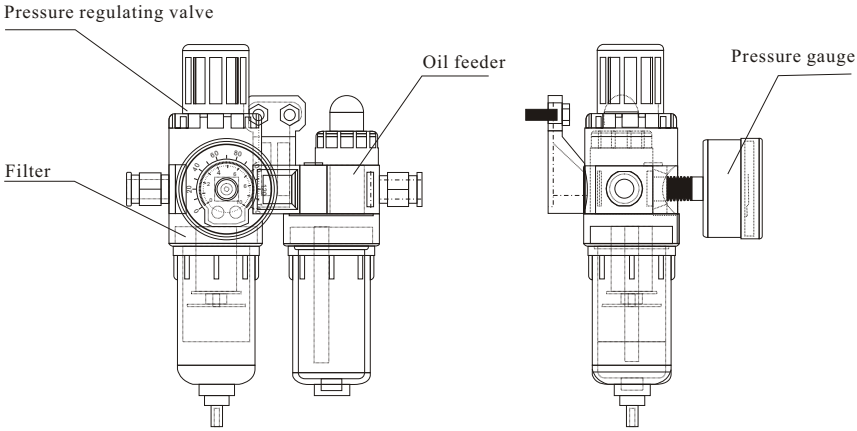

I. technical parameters

Type		AC1500	AFC1500	AC2000	AFC2000
Working medium		Air			
Diameter of nipple		1/8″		1/4″	
Filter element precision		40 μ			
Pressure range		Manual drain：0.05~0.85MPa			
Maximum adjustable pressure		0.95MPa			
Insurance of pressure resistant		1.5MPa			
Temperature range		5~60℃			
Volume of water filter cup		15CC			
Volume of oil feeding cup		25CC			
Lubricating oil recommended		ISO VG32 Or oil with the same grade			
Weight		0.7kg	0.5kg	0.7kg	0.5kg
Components	Filter	AF1500	AFR1500	AF2000	AFR1500
	Pressure regulating valve	AR1500		AR2000	
	Oil feeder	AL1500	AL1500	AL2000	AL2000

II. Installation

During installation, please clean connection pipelines and connectors to prevent the dirt from being brought into the air channel

During installation, please note whether the air flow direction is coherent with the direction of the arrow in the main body. Please make sure if the pipeline and tooth -type connector is proper or not.

The fixation of filter, pressure regulating valve (pressure regulating filter) and oil feeder: match the convex groove of the fixing bracket with the concave groove of the main body. Then tighten it with fixing piece and screw.

As regards the fixation when pressure regulating valve and pressure regulating filter are separately applied, just rotate the fixing ring to tighten the accessory special fixing piece up.

III. Water output (filter)

The water output of the filter can be automatically implemented by differential pressure. Meanwhile it can be manually implemented.

Water discharged by manual operation: the water shall be discharged before the water level reaches the level under the filter holder.

IV. Pressure regulation (filter)

Lift the rotary button up before tuning it and press the button to locate.

Turn the rotary button to the right direction to increase the outlet pressure and turn it to the left direction to reduce the outlet pressure.

During the pressure regulation, the pressure shall be gradually and evenly regulated to the required value and it is infeasible to regulate it at a stroke.

V. Approaches to feed oil and oil amount regulation (oil feeder)

The JIS K2213 engine oil (ISO VG32 or oil with the same grade) is applied to the oil feeder. The oil amount shall not exceed 4/5 volume of the cup.

The oil amount is the minimum when the number is zero and it reaches the maximum when the number is 9. The number shall point at the ▲ arrow direction. It can't be rotated in the position of the number ranging from 9 to 0 and it shall be rotated clockwise.

VI. Operation precautions

Some components are made from PC materials, while they are prohibited from being close to or being used in organic solvents.

The pressure used shall not exceed 0.95MPa.

The filter element shall be promptly changed when there is an obvious decrease of outlet air volume.

For other detailed materials, please refer to the product sample.

VII. Order code

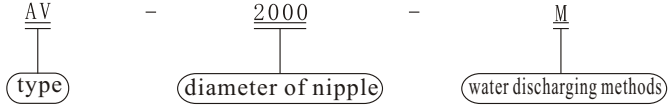

AC: middle-sized tripletAC: middle-sized triplet
AFC: middle-sized air source treatment unit

1500：1/8"
2000:1/4"

Blank: differential pressure drain type
M: standard manual drain type

Hand operating mechanism (accessory)

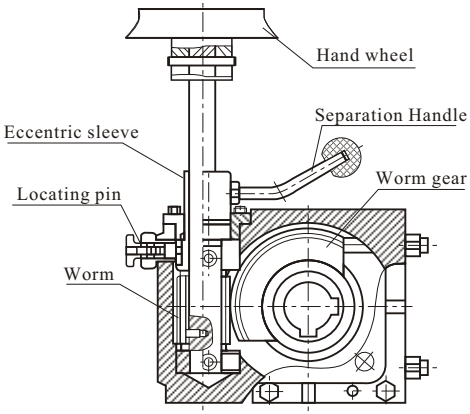

I. Main functions

This speed reducer is used with pneumatic devices to open 90-degree butterfly valve, ball valve and plug valve, etc to realize manual or pneuma-tic drive.

II.Features

It is small and light-weighted with reasonable designs and novel styles.

The product is serialized, while the output torque and pneumatic devices match with various valves.

There are two key grooves vertical to each other inside the inner holes connecting worm wheels, so as to be convenient for users to choose relative places for the same valve body of devices according to their needs.

Lit the locating pin up and rotate the separation handle by 180 degrees. The locating pin automatically set position for itself to realize pneumatic operation. On the contrary, manual operation is realized.

When the product leaves the factory, special lubricating grease is equipped. After it is equipped with valves, all of these are sealed as a whole. The dust-proof, water-proof and protection level is IP65.

III. Operation instructions

In terms of the connection of the speed reducer bottom with valve, the bracket surface is connected with the cylinder, while the valve shaft passes though the inner holes. The four sides of valve shaft ends work in with the square hole of the cylinder. (Operation process: during pneumatic operation, the cylinder drives the valve shaft and the worm gear rotates as well. During manual operation, the worm joggles with the worm gear, driving the valve shaft to rotate, while the cylinder piston rotates as well.)

When the worm is closed by the revolving handle (rotated by 180 degrees out-ward), gear interference phenomenon will emerge. In this case, it is necessary to rotate the hand wheel by certain degree.

The pneumatic and manual operation can't be simultaneously implemented.

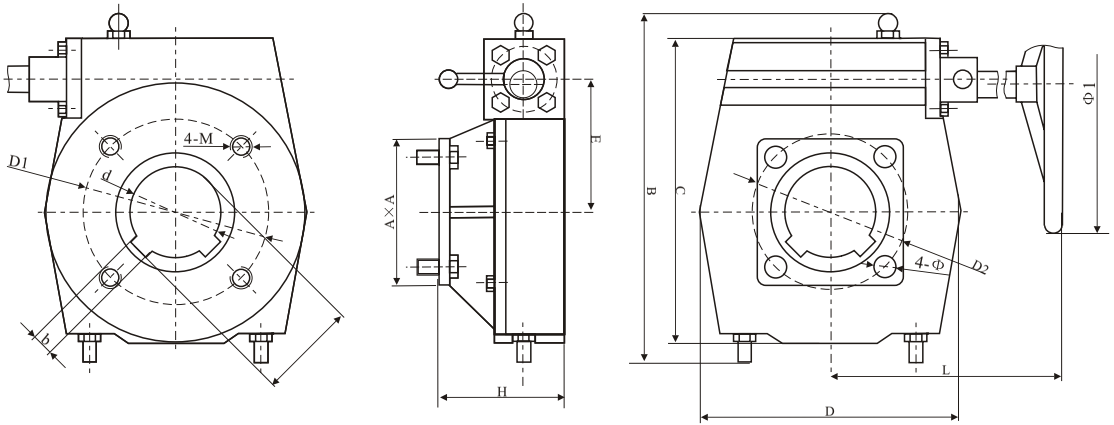

Connecting dimensions of hand-operating mechanism:

N.M	Type	d	b	t	D_1	4-M	A×A	D_2	4-Φ	H	Φ1	L	B	C	D	E	Adaptive GT cylinder type
300	XLHJ26	22	6	25.4	70	4-M8	64×64	70	4-Φ9	75	Φ180	190	170	132	106	49	GT63 83 63E 83E
620	XLHJ38-1	38	10	41.3	102	4-M10	110×110	102	4-Φ12	87	Φ250	225	191	156	125	65.5	GT110 127 110E 127E
620	XLHJ38-2	38	10	41.3	102	4-M10	110×110	125	4-Φ12	87	Φ250	225	191	156	125	65.5	GT160
1200	XLHJ54-1	48	14	51.8	140	4-M12	130×130	125	4-Φ14	98	Φ300	233	234	199	175	85.5	GT190 210 160E
1200	XLHJ54-2	48	14	51.8	140	4-M16	130×130	140	4-Φ18	98	Φ300	233	234	199	175	85.5	GT190 210 160E
2000	XLHJ80A-1	60	18	64.4	165	4-M16	130×130	140	4-Φ18	122	Φ350	277	311	279	234	123	GT255 190E 210E
2000	XLHJ80A-2	60	18	64.4	165	4-M20	156×156	165	4-Φ22	122	Φ350	277	311	279	234	123	GT255 190E 210E
3500	XLHJ78	76.2	20	82.3	165	4-M20	156×156	165	4-Φ22	123	Φ450	285	380	332	285	141.6	GT255E